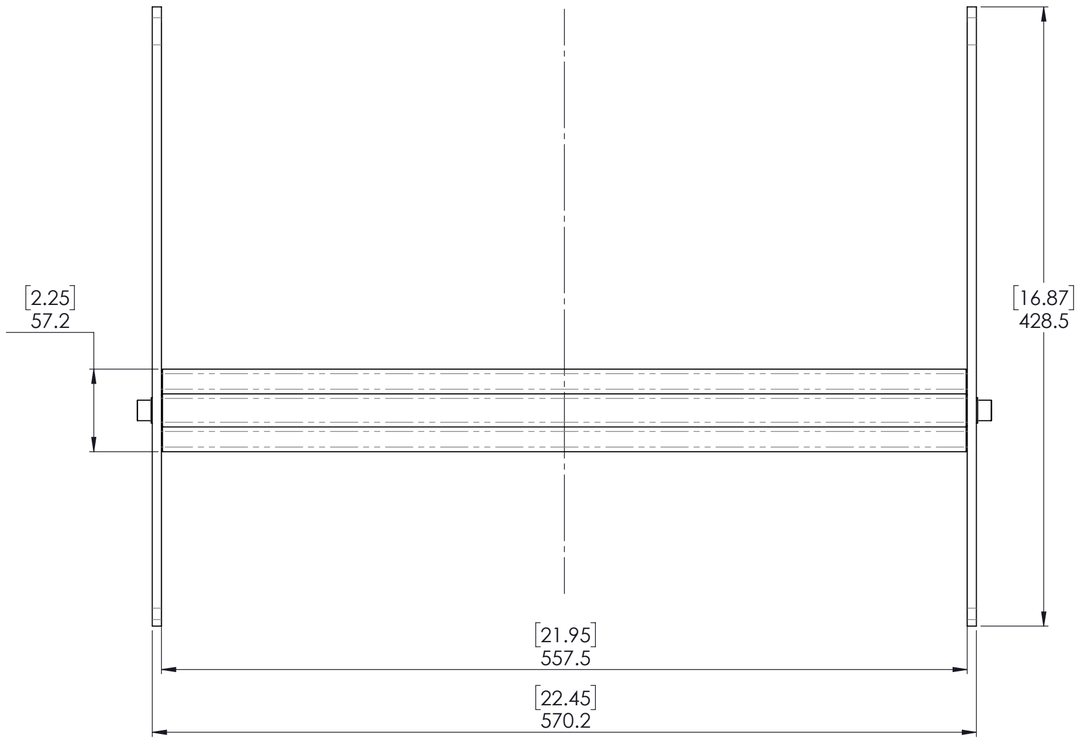

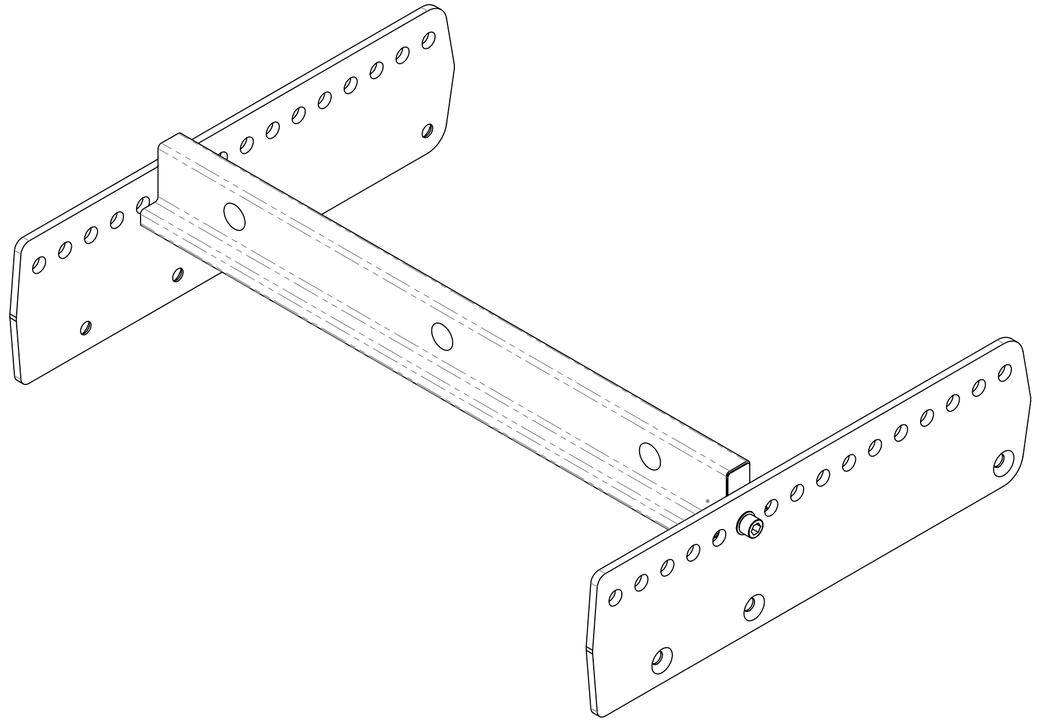

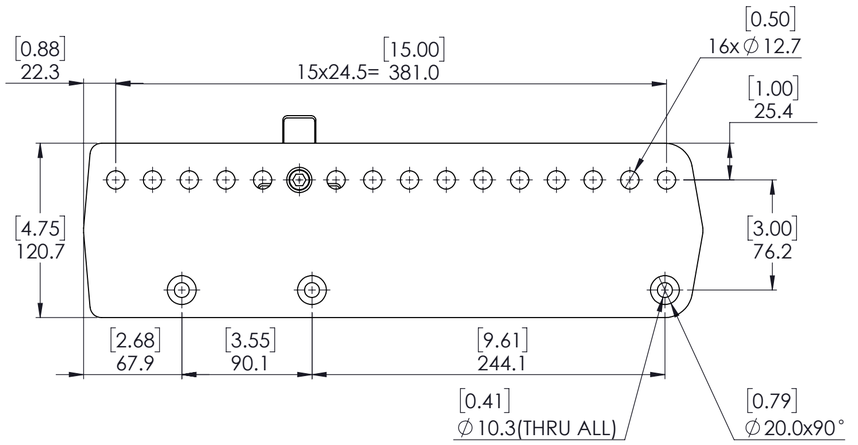

EVA-SG2-BLK	STANDARD GRID FOR FULL RANGE, BLACK
EVA-SG2-WHT	STANDARD GRID FOR FULL RANGE, WHITE

Ind.	Change	YYYYMMDD	Drawn	Checked	Release	BWN	Resp. dept.	Add info.
01	------	20230426	bak2zhu	paa1sab	bak2zhu	368	BT-CO/ENG3	RELEASED
00	------	20230420	bak2zhu	paa1sab	bak2zhu	368	BT-CO/ENG3	DRAWN

Treatment

Missed Details

Size

Material

From

Lang. en

Weight

Crit. P.

Scale 1:3

Mat. meets N2580-1

Syst. SW

EVA-SG2

Sheet 1 / 1

Doc.Type DRW

2 MODELS CHARTED

DP/TD

Vers. 01

Format A2

MNR

Repl. for

Repl. by

© Robert Bosch LLC [2008]. All rights reserved, also regarding any disposal, exploitation, reproduction, editing, distribution, as well as in the event of applications for industrial property rights.